Audible & Visual Signals - Explosion Proof
STAINLESS STEEL **SOUNDER/BEACON**

Explosion Proof Sounder/Beacon> Stainless Steel **SB125-1 Series**

Product overview

The SB125-1 electronic combined sounder beacon range has been approved for use in potentially explosive atmospheres and very harsh environmental conditions.

Typical applications are Oil and Gas, On-shore and Offshore, Chemical, Petrochemical, Refineries & Marine locations etc.

The unit incorporates a three stage alarm option with 60 tones to choose from.

All tones can be pre-set during installation. In addition, the unit also incorporates a visual warning signal with a choice of two types of light source: either xenon (strobe) with multiple flash rates and power ratings or an LED array with three status type indication options.

The units also have the ability to be fitted with a telephone initiation function and can be used as the second ring output indicator for telephones when installed in very noisy environments.

The design allows for termination inside the enclosure. The unit can be bracket mounted only.

Features/Certifications

- Approved by ATEX, IECEx
- CQST (Available on request only)
- ATEX: Ex d IIC T4~ T6 Gb
  Ex tb IIIC T135°C~T85°C
- Zones 1, 2, 21 & 22
- Conforms to:
  EN 60079-0:2012 (IEC 60079-0:2011),
  EN-60079-1:2007 (IEC 60079-1:2007)
  EN 60079-31:2009 (IEC 60079-31:2008)
- Volume control
- 360° light output
  around the vertical axis
- Dustproof & Weatherproof

SB125-1 Series > Ordering Information

Follow the chart (right) to generate your part code.

	Lens Colour	Beacon Type	Power (Xenon)	Power (LED)	Voltage	Duty Label	Tag Label	Lens Guard	Cable Entry	Finish Colour	Telephone Initiated
SB125-1 +	**A** = Amber	**X** = Xenon	**02** = 2.5J	**05** = 5W	**DC** 12 - 48v	**Y** = Yes	**Y** = Yes	**Y** = Yes	**A** = M20	**RD** = Red	**Y** = Yes
	R = Red		**05** = 5J							**YW** = Yellow	
	B = Blue	**L** = LED	**10** = 10J	**10** = 10W	**AC** 100 - 240v	**N** = No	**N** = No	**N** = No	**B** = M25	**BU** = Blue	**N** = No
	G = Green		**15** = 15J							**BL** = Black	
	C = Clear		**20** = 20J							**OR** = Other	

MODEL CONFIGURATOR (By using the table above, complete this box sequence to select your required sounder beacon).

SB125-1											
	Lens Colour	Beacon Type	Power (Xenon)	Power (LED)	Voltage	Duty Label	Tag Label	Lens Guard	Cable Entry	Finish Colour	Telephone Initiated

Note: All customers orders will be confirmed in writing. Care should be taken that the correct code has been ordered as be-spoke manufactured products cannot be returned for exchange or credit later.

Kg 8.0 | **°C** -40+70 | **IP** 66 | **dB** 111* | **MARINE** | **INDUSTRIAL** | **STAINLESS STEEL**

APPROVALS and CONFORMITIES

Explosion Proof Sounder/Beacon > Stainless Steel **SB125-1 Series**

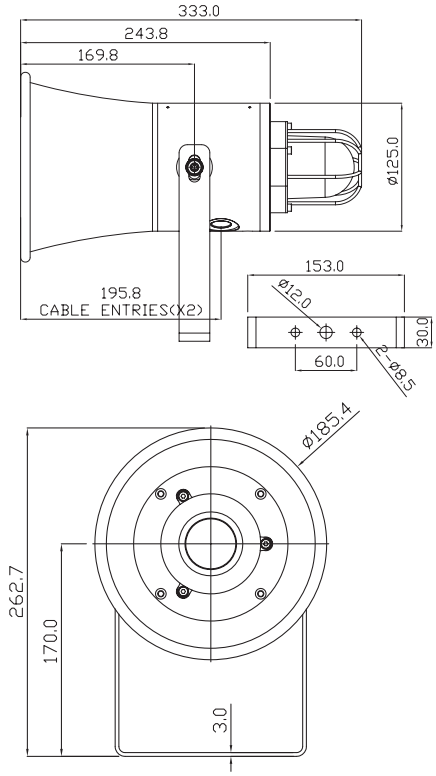

General Information

EX CODE: Ex d IIC T4~ T6 Gb, Ex tb IIIC T135°C~T85°C
CERTIFICATION: ATEX (Nemko 14 1010X), IECEx (NEM 14.0006X)
CQST (Available on request only)
TYPE: Xenon or LED Audible and Visual Signal Warning Device
SOUNDER: 3 Stage alarm with 60 Selectable tones
POWER RATING: 5-20 Watts Adjustable
SOUND OUTPUT: Up to 111 dB at 1 metre (+/- 3 dB) *

Xenon Working Status			**Xenon - Flashing**		
Flash Rate			Selectable from 60-180 Flashes per Minute		
Power Rating	2.5 J (4W) Max	5 J (10W) Max	10 J (15W) Max	15 J (20W) Max	20 J (25W) Max
Effective Candela	67	109	293	395	424

LED Working Status	**LED - Flashing / Rotating / Static**
Flash Rate	Selectable from 60-120 Flashes per Minute
Rotation Rate	Selectable from 60-120 Revolutions per Minute
Static Mode	Permanently ON (ie Steady)
Power Rating	5 W
Effective Candela	128

MULTIPLYING FACTOR FOR COLOURED LENSES:
Amber x 0.51, Red x 0.15, Blue x 0.12, Green x 0.49, Clear x 1

Mechanical Specifications

MATERIAL: Enclosure & Bracket: Stainless Steel 316
Lens: Tempered Glass
LENS COLOURS: Amber, Red, Blue, Green, Clear or Other (specify)
ENCLOSURE COLOUR: Red (RAL3001), Yellow (RAL1003)
Blue (RAL5005), Black (RAL9004)
AMBIENT TEMPERATURE: -40 to +70
HUMIDITY: ≤ 95% RH
WEIGHT: 8 Kg / 17.6 lb
DIMENSIONS: Length: 333mm / 13.1" No Lens Guard Fitted
See outline drawing for other dimensions
INGRESS PROTECTION: IP 66

Electrical Specifications

POWER SUPPLY: ≤48v Dc or 100-240v Ac (50/60 Hz), Beacon: ≤25W,
Sounder: ≤20W
TERMINATION: Accepts upto ≤ 2.5mm² incorporating rising clamp protectors
CABLE ENTRY: 2 x M20 or M25.
For 1/2" or 3/4"NPT requirements, male female adapter glands are available. Contact sales dept for further part codes.
CURRENT CONSUMPTION: Sounder 250 mA - 1500 mA (Adjustable by tone selection)

Accessories

50210: M20 E1EX Stainless Steel Gland
(Multi Armour Cone) Atex Cat 2 & 3, EExde IIC 2 GD
Cable ID 11 - 15.5mm
OD 14.5 - 21mm
Gland for Multi Armoured Cable *

50211: M20 A2EX Stainless Steel Gland
Atex Cat 2 & 3, EExde IIC 2 GD
Cable OD 11 - 1 5.5mm
Gland for Unarmoured Cable *

50212: M20 E1EX-QS Stainless Steel Gland
(Ex d IIC, Ex e IIC, Ex nR IIC, Ex tb IIIC)
Cable OD 14.5 - 20.5mm
Barrier Gland for Steel and Aluminium Armoured Cable *

50213: M20 A2EX Quick Stop Stainless Steel Gland
(Ex d IIC, Ex nR IIC, Ex tb IIC)
Cable OD 9 - 15mm
Barrier Gland for Unarmoured Cable *

50214: M20 Stainless Steel Stopping Plug
Atex EExde I/IIC
Standard M20 Blanking Plug

50221: Epoxy Minute Adhesive 24m/l tube
One tube sufficient for five barrier glands

*** 15mm Thread length for Stainless Steel products**

Note: **M25 options available for the above**

SB125-1 Series > Power Consumption & Working Current

Power Consumption: Sounder: 5-20W & LED: 5W

Xenon	**2.5 Joule**	**5 Joule**	**10 Joule**	**15 Joule**	**20 Joule**
	4 W (Max)	10 W (Max)	15 W (Max)	20 W (Max)	25 W (Max)

Working Current: Sounder: 250 mA - 1500 mA & LED: 220 mA (Max)

Xenon	**2.5 Joule**	**5 Joule**	**10 Joule**	**15 Joule**	**20 Joule**
	160 mA	320 mA	650 mA	1A (Max)	1.4A (Max)